PRO-FORM®
8.0 EX

Model No. PFEX14817-INT.0
Serial No. _____

Write the serial number in the space above for reference.

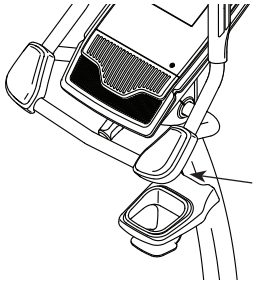

CUSTOMER SERVICE

UNITED KINGDOM
Call: 0330 123 1045
From Ireland: 053 92 36102
Website: iconsupport.eu
E-mail: csuk@iconeurope.com
Write:
ICON Health & Fitness, Ltd.
Unit 4, Westgate Court
Silkwood Park
OSSETT
WF5 9TT
UNITED KINGDOM

AUSTRALIA
Call: 1800 993 770
E-mail: australiacc@iconfitness.com
Write:
ICON Health & Fitness, Inc.
PO Box 635
WINSTON HILLS NSW 2153
AUSTRALIA

⚠ CAUTION

Read all precautions and instructions in this manual before using this equipment. Keep this manual for future reference.

USER'S MANUAL

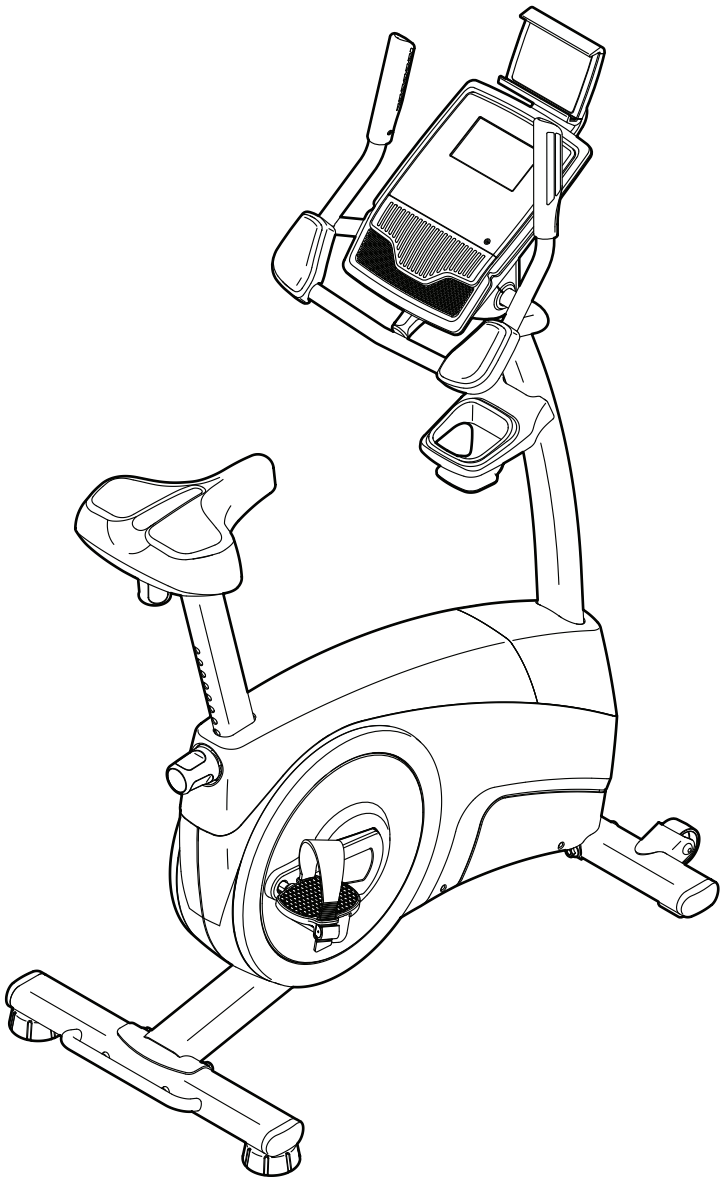

iconeurope.com

TABLE OF CONTENTS

WARNING DECAL PLACEMENT 2
IMPORTANT PRECAUTIONS 3
BEFORE YOU BEGIN 4
PART IDENTIFICATION CHART 5
ASSEMBLY 6
HOW TO USE THE EXERCISE BIKE 13
MAINTENANCE AND TROUBLESHOOTING 21
EXERCISE GUIDELINES 23
PART LIST 24
EXPLODED DRAWING 26
ORDERING REPLACEMENT PARTS . . . . . Back Cover
RECYCLING INFORMATION . . . . . Back Cover

WARNING DECAL PLACEMENT

This drawing shows the location(s) of the warning decal(s). **If a decal is missing or illegible, see the front cover of this manual and request a free replacement decal. Apply the decal in the location shown.** Note: The decal(s) may not be shown at actual size.

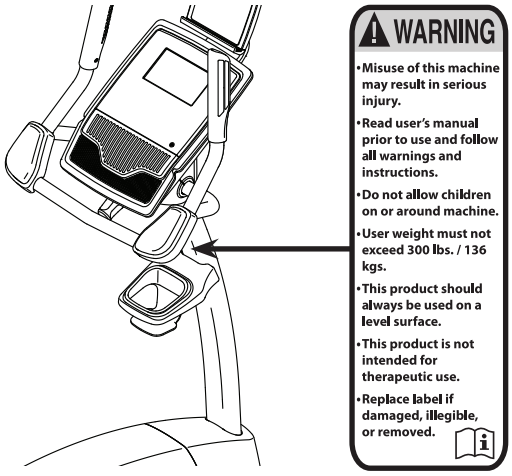

PROFORM and IFIT are registered trademarks of ICON Health & Fitness, Inc. App Store is a trademark of Apple Inc., registered in the U.S. and other countries. Android and Google Play are trademarks of Google LLC. The Bluetooth® word mark and logos are registered trademarks of Bluetooth SIG, Inc. and are used under license. IOS is a trademark or registered trademark of Cisco in the U.S. and other countries and is used under license.

IMPORTANT PRECAUTIONS

⚠ WARNING: To reduce the risk of serious injury, read all important precautions and instructions in this manual and all warnings on the exercise bike before using the exercise bike. ICON assumes no responsibility for personal injury or property damage sustained by or through the use of this product.

1. It is the responsibility of the owner to ensure that all users of the exercise bike are adequately informed of all precautions.
2. Before beginning any exercise program, consult your physician. This is especially important for persons over age 35 or persons with pre-existing health problems.
3. The exercise bike is not intended for use by persons with reduced physical, sensory, or mental capabilities or lack of experience and knowledge, unless they are given supervision or instruction about use of the exercise bike by someone responsible for their safety.
4. Use the exercise bike only as described in this manual.
5. The exercise bike is intended for home use only. Do not use the exercise bike in a commercial, rental, or institutional setting.
6. Keep the exercise bike indoors, away from moisture and dust. Do not put the exercise bike in a garage or covered patio, or near water.
7. Place the exercise bike on a level surface with at least 2 ft. (0.6 m) of clearance around the exercise bike. To protect the floor or carpet from damage, place a mat under the exercise bike.
8. Inspect and properly tighten all parts each time the exercise bike is used. Replace any worn parts immediately. Use only manufacturer-supplied parts.
9. Keep children under age 16 and pets away from the exercise bike at all times.
10. Wear appropriate clothes while exercising; do not wear loose clothes that could become caught on the exercise bike. Always wear athletic shoes for foot protection.
11. The exercise bike should not be used by persons weighing more than 300 lbs. (136 kg).
12. Be careful when mounting and dismounting the exercise bike.
13. The heart rate monitor is not a medical device. Various factors, including the user's movement, may affect the accuracy of heart rate readings. The heart rate monitor is intended only as an exercise aid in determining heart rate trends in general.
14. Always keep your back straight while using the exercise bike; do not arch your back.
15. Over exercising may result in serious injury or death. If you feel faint, if you become short of breath, or if you experience pain while exercising, stop immediately and cool down.

BEFORE YOU BEGIN

Thank you for selecting the revolutionary PROFORM® 8.0 EX exercise bike. Cycling is one of the most effective exercises for increasing cardiovascular fitness, building endurance, and toning the entire body. The 8.0 EX exercise bike provides an impressive selection of features designed to make your workouts at home more effective and enjoyable.

For your benefit, read this manual carefully before you use the exercise bike. If you have questions after reading this manual, please see the front cover of this manual. To help us assist you, note the product model number and serial number before contacting us. The model number and the location of the serial number decal are shown on the front cover of this manual.

Before reading further, please familiarize yourself with the parts that are labeled in the drawing below.

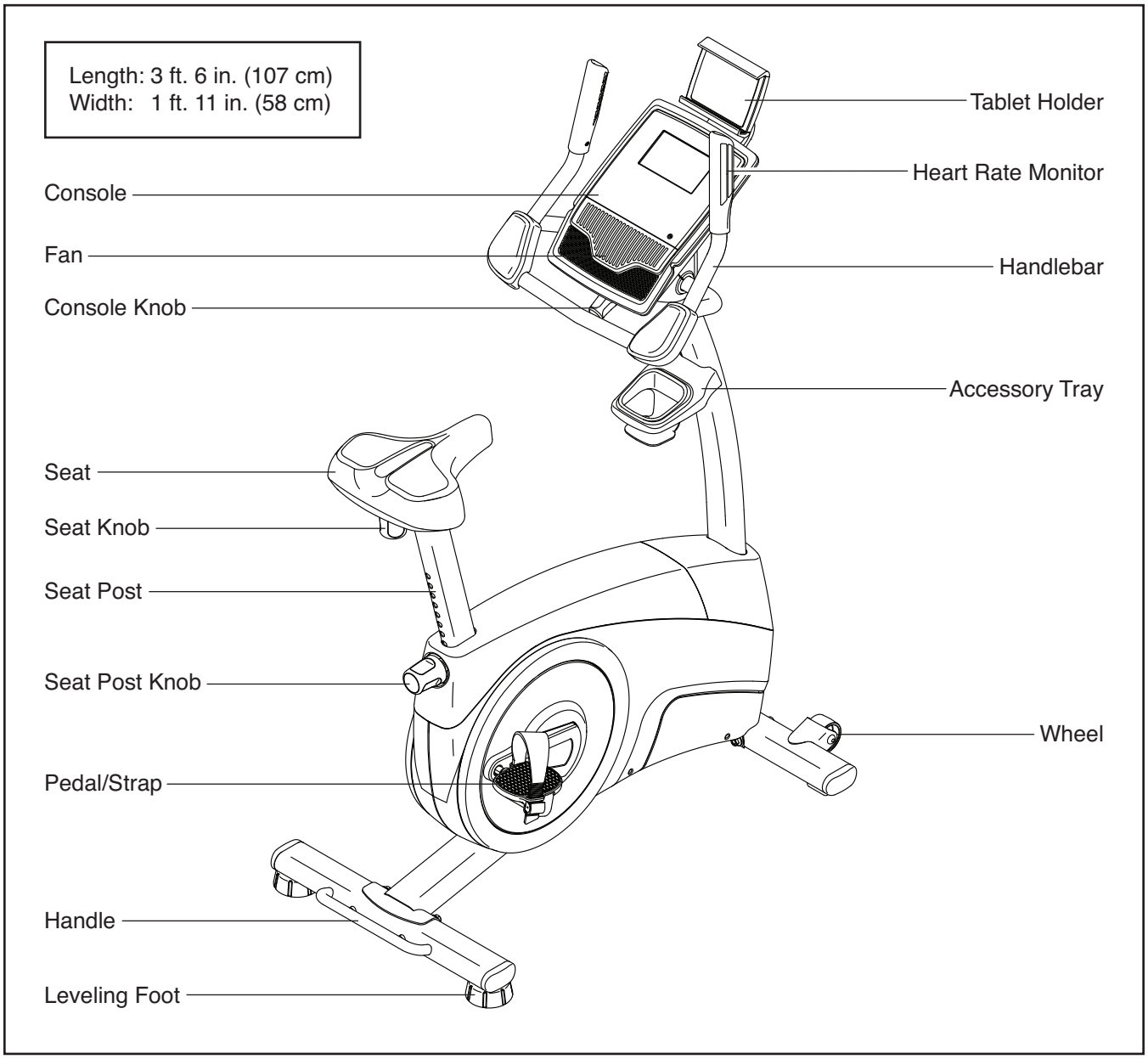

PART IDENTIFICATION CHART

Use the drawings below to identify the small parts needed for assembly. The number in parentheses below each drawing is the key number of the part, from the PART LIST near the end of this manual. The number following the key number is the quantity needed for assembly. **Note: If a part is not in the hardware kit, check to see whether it has been preassembled. Extra parts may be included.**

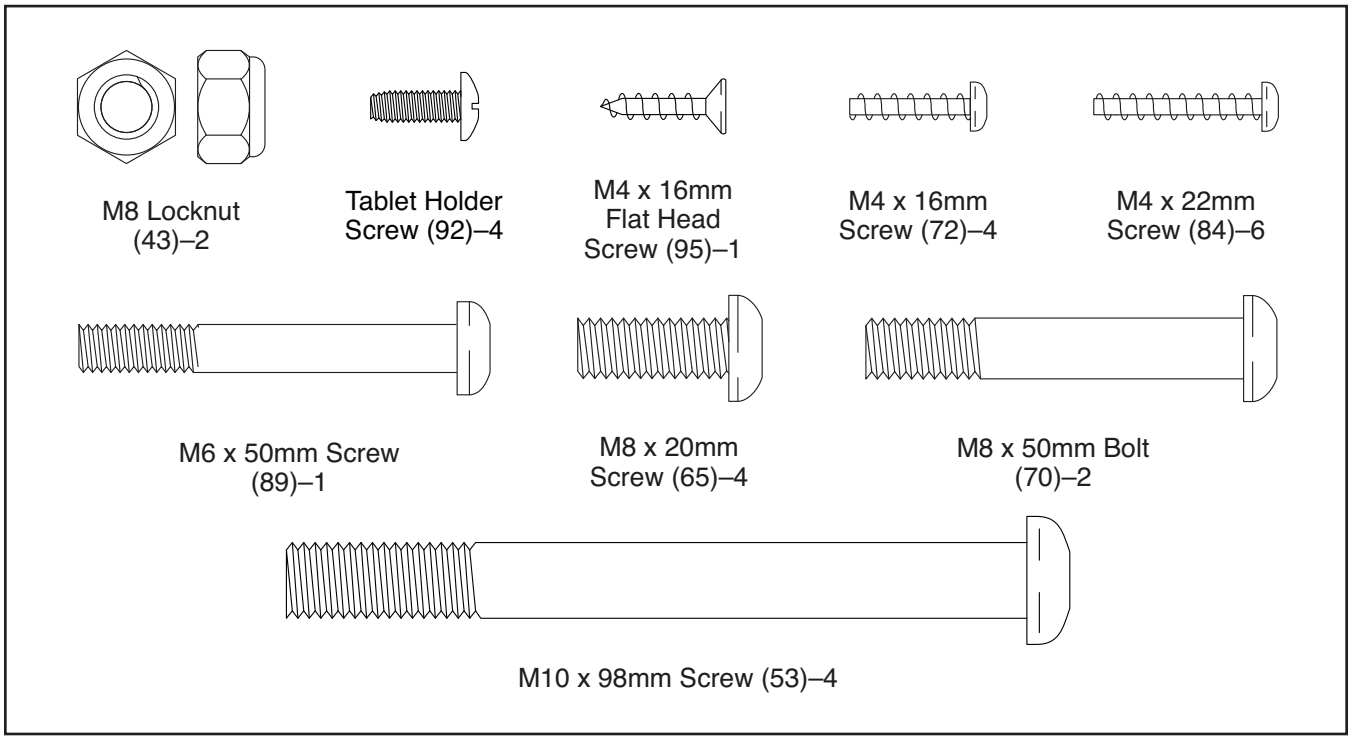

ASSEMBLY

- Assembly requires two persons.
- Place all parts in a cleared area and remove the packing materials. Do not dispose of the packing materials until you finish all assembly steps.
- Left parts are marked “L” or “Left” and right parts are marked “R” or “Right.”
- To identify small parts, see page 5.
- In addition to the included tool(s), assembly requires the following tools:

  one Phillips screwdriver 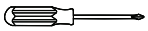

  one adjustable wrench

  Assembly may be easier if you have a set of wrenches. To avoid damaging parts, do not use power tools.

1. **To register your product and activate your warranty in the UK,** go to iconsupport.eu. If you do not have internet access, call Customer Service (see the front cover of this manual).

   To register your product and activate your warranty in Australia, email or post the following information to the email address or postal address on the front cover of this manual.
   - your receipt (make sure to keep a copy)
   - your name, address, and telephone number
   - the model number, serial number, and name of your product (see the front cover of this manual)

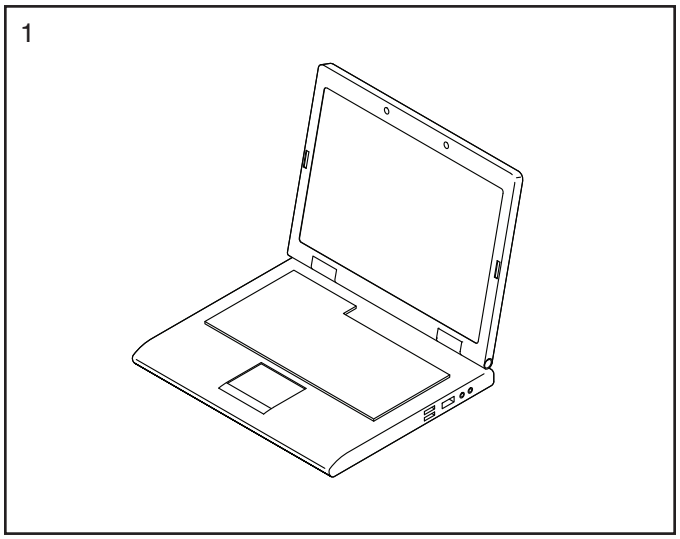

2. Set a sturdy piece of packing material under the rear of the Frame (1).

   Attach the Rear Stabilizer (3) to the Frame (1) with two M10 x 98mm Screws (53).

   Then, remove the packing material.

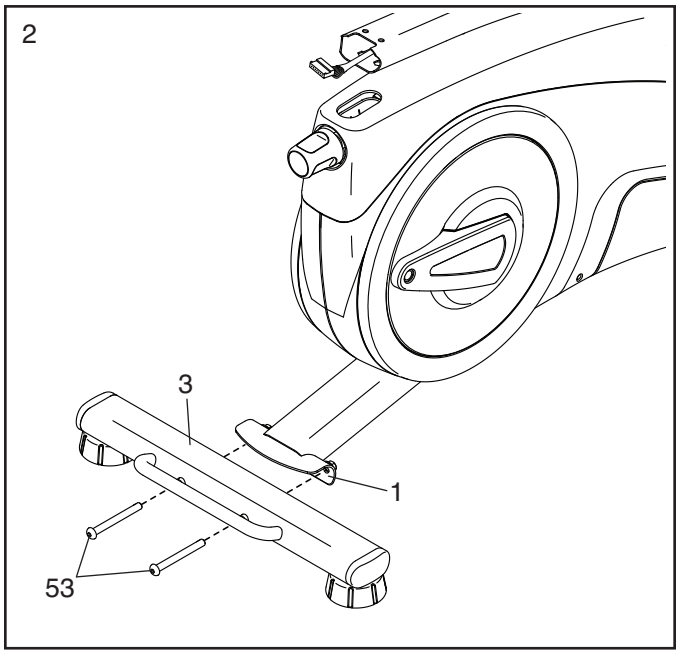

3. Set a sturdy piece of packing material under the front of the Frame (1).

   Attach the Front Stabilizer (2) to the Frame (1) with two M10 x 98mm Screws (53).

   Then, remove the packing material.

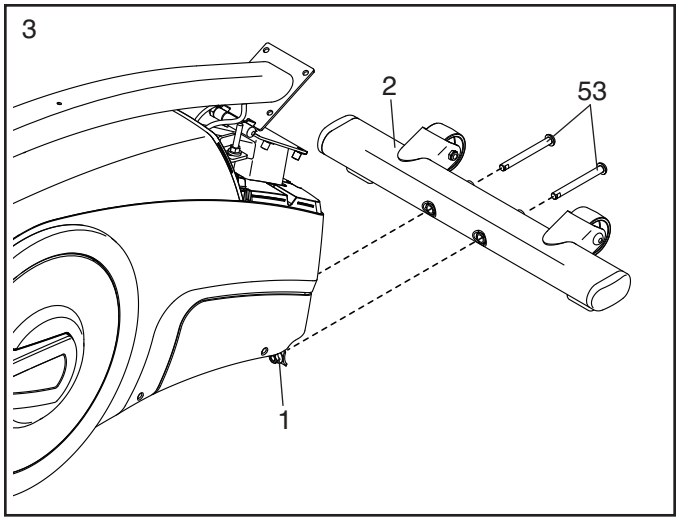

4. Raise the Upright (4) to the vertical position. **Have a second person hold the Upright until you complete this step.**

   Attach the Upright (4) to the Frame (1) with four M8 x 20mm Screws (65); **start all the Screws, and then tighten them.**

   Next, orient the Front Shield Cover (9) as shown, and slide it downward onto the Upright (4). Then, press the Front Shield Cover onto the Right and Left Shields (10, 11).

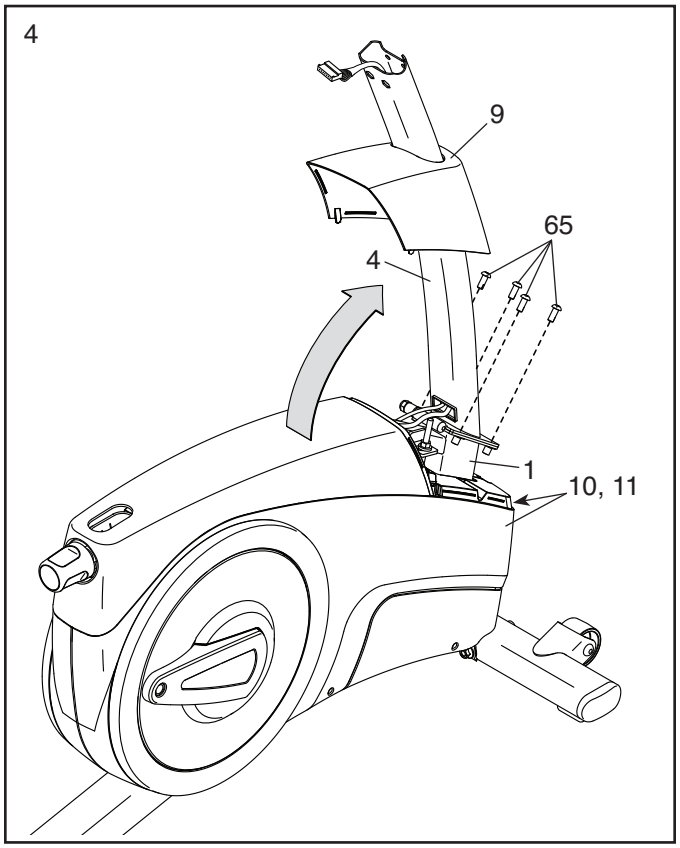

5. Attach the Front Shield Cover (9) to the Rear Shield Cover (7) with an M4 x 16mm Flat Head Screw (95).

   Then, attach the Accessory Tray (8) to the Upright (4) with an M6 x 50mm Screw (89).

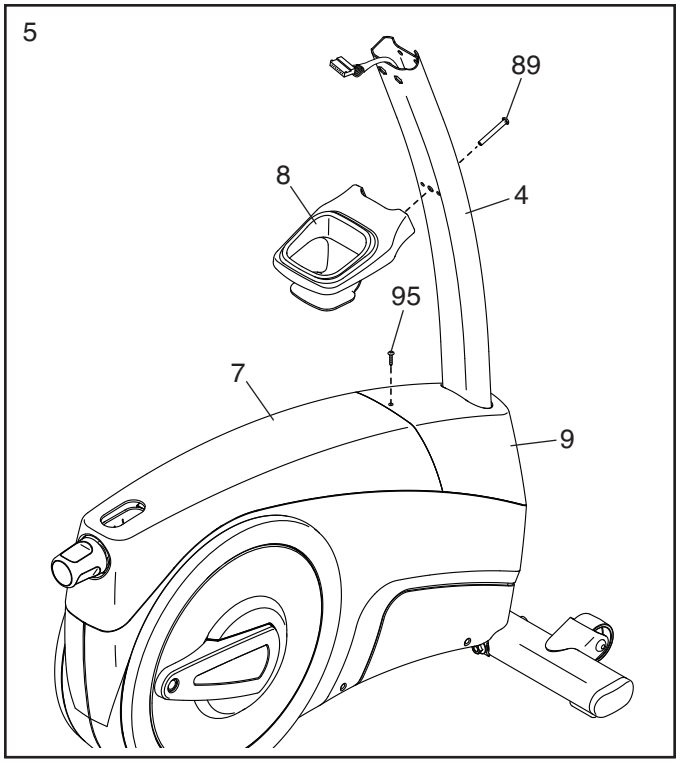

6. Identify the Right Armrest (16).

   Attach the Right Armrest (16) to the Handlebar (5) with two M4 x 22mm Screws (84).

   Attach the Left Armrest (31) in the same way.

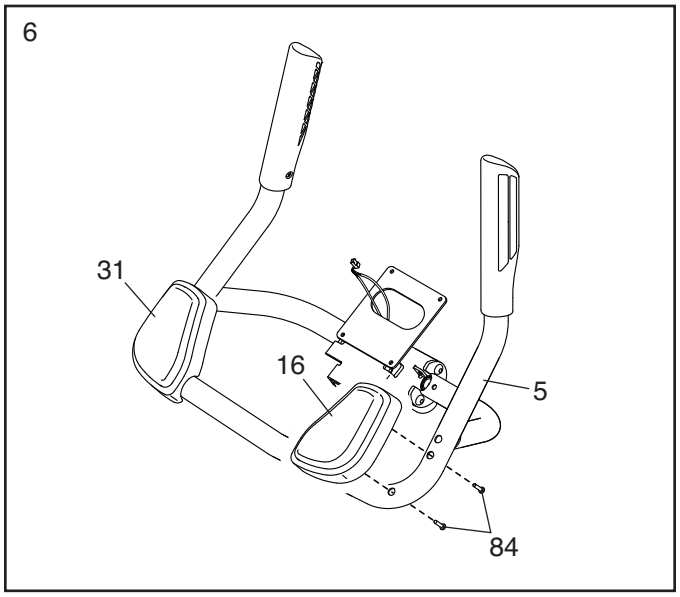

7. Have a second person hold the Handlebar (5) near the Upright (4).

   See the inset drawing. Route the Upper Wire (87) through the Pivot Post (78) and the Pivot Bracket (71) as shown. **Tip: It may be easier to route the Upper Wire if you adjust the angle of the Pivot Bracket by turning the Console Knob (77).**

   Tip: Avoid pinching the wires. Insert the Pivot Post (78) into the Upright (4).

   Attach the Pivot Post (78) with two M8 x 50mm Bolts (70) and two M8 Locknuts (43); **make sure that the Locknuts are in the hexagonal holes (A).**

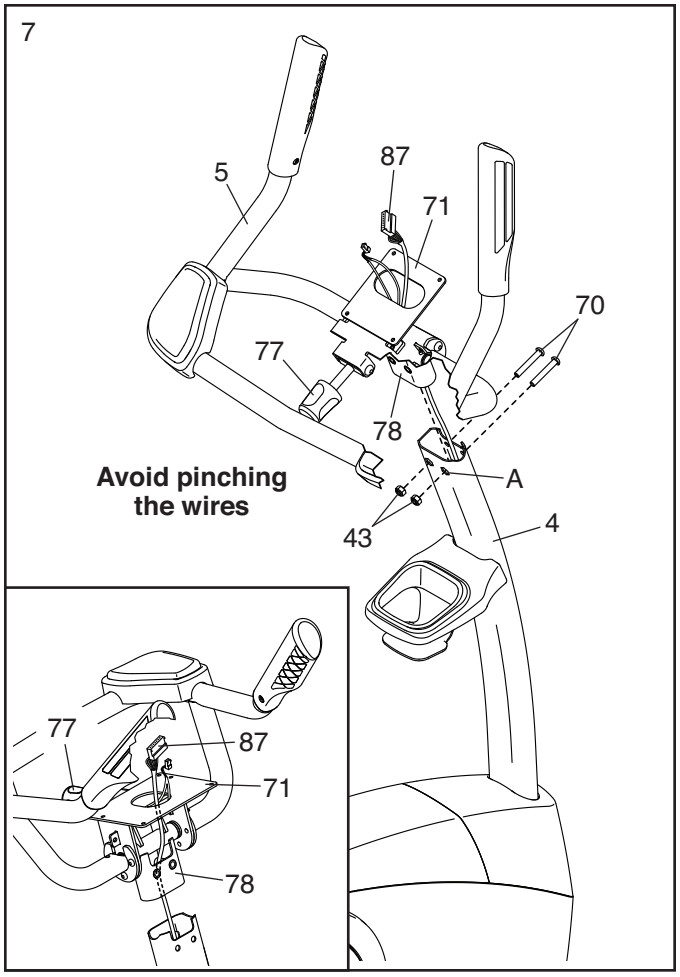

8. **IMPORTANT: Turn the Console Knob (77) until the Pivot Bracket (71) is in the most vertical position.**

   While a second person holds the Console (13) near the Pivot Bracket (71), connect the wires on the Console to the Upper Wire (87) and the Pulse Wire (61). **Tip: The wire connectors should slide together easily and snap into place. If they do not, turn one connector and try again.**

   Insert the excess wire downward through the Pivot Bracket (71). **Do not insert the excess wire into the Console (13); the wires may interfere with the fan.**

   Tip: Avoid pinching the wires. Attach the Console (13) to the Pivot Bracket (71) with four M4 x 16mm Screws (72).

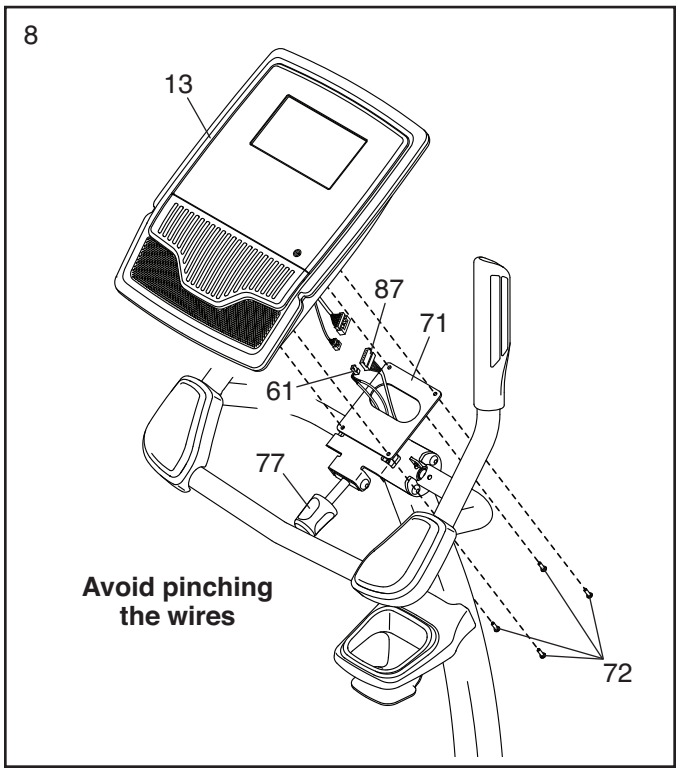

9. **Tip: Avoid pinching the wires.** Press the Front Pivot Cover (12) and the Rear Pivot Cover (15) together around the Pivot Bracket (71).

   Attach the Front and Rear Pivot Covers (12, 15) to the Pivot Bracket (71) with two M4 x 22mm Screws (84).

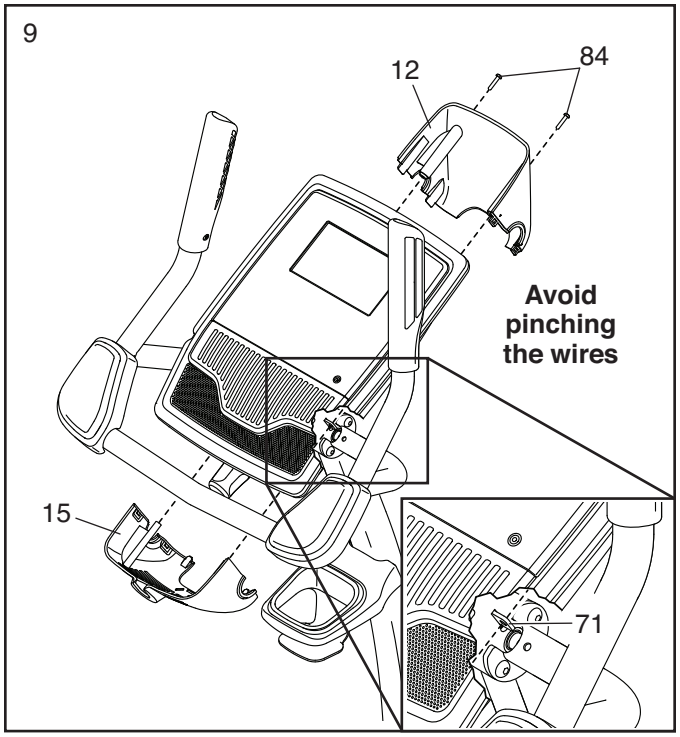

10. Remove the Seat Knob (26) from the Seat Bracket (30) inside the Seat Carriage (24).

    Next, hold the Seat Carriage (24) on the Seat Post (6). Insert the Seat Knob (26) upward into the Seat Post, and tighten the Seat Knob into the Seat Bracket (30) inside the Seat Carriage.

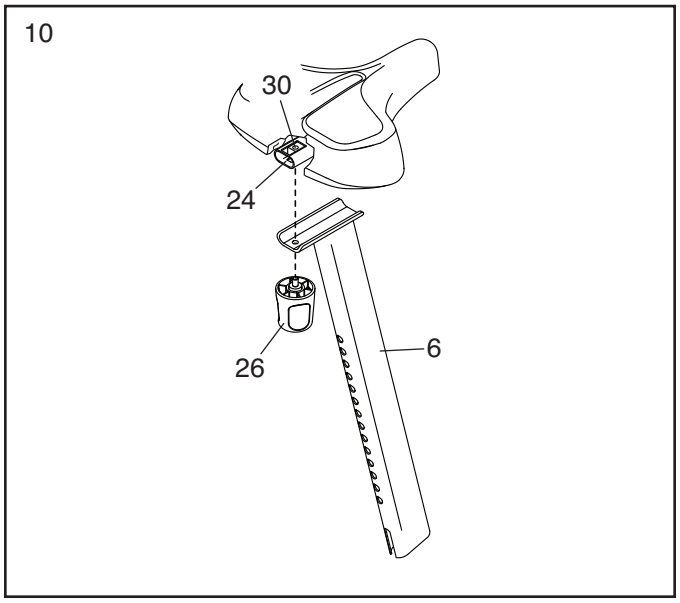

11. Loosen the Seat Post Knob (27) and pull it outward. **Then, remove and discard the shipping bracket (not shown) that is inside the Seat Post Sleeve (28).**

    Next, insert the Seat Post (6) into the Seat Post Sleeve (28), and release the Seat Post Knob (27). **Move the Seat Post upward or downward slightly to make sure that the Seat Post Knob is engaged in one of the adjustment holes in the Seat Post.** Then, tighten the Seat Post Knob.

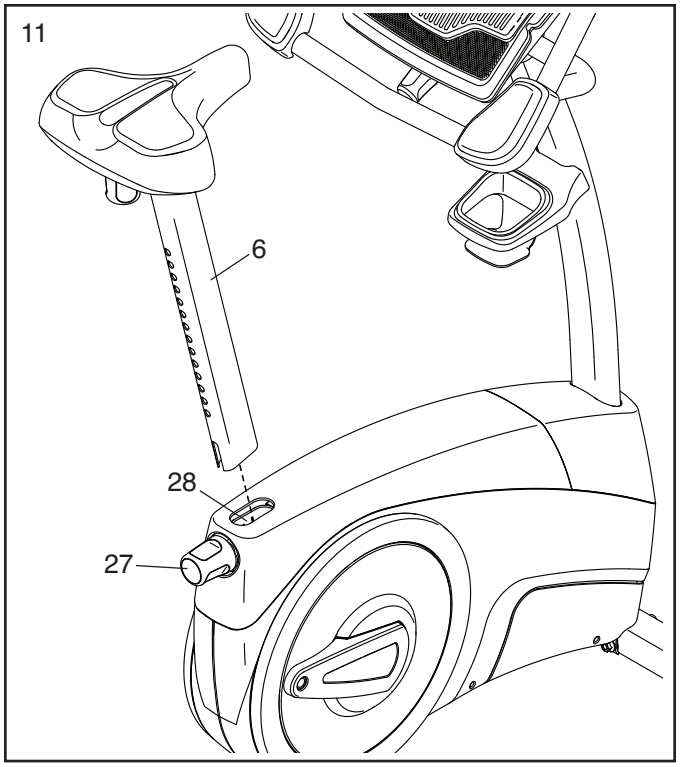

12. Identify the Right Pedal (21).

    Using an adjustable wrench, **firmly tighten** the Right Pedal (21) **clockwise** into the Right Crank Arm (19).

    Firmly tighten the Left Pedal (not shown) counterclockwise into the Left Crank Arm (not shown). IMPORTANT: You must turn the Left Pedal counterclockwise to attach it.

    Then, attach the right pedal strap (B) to the Right Pedal (21) as shown. **Attach the left pedal strap (not shown) in the same way.**

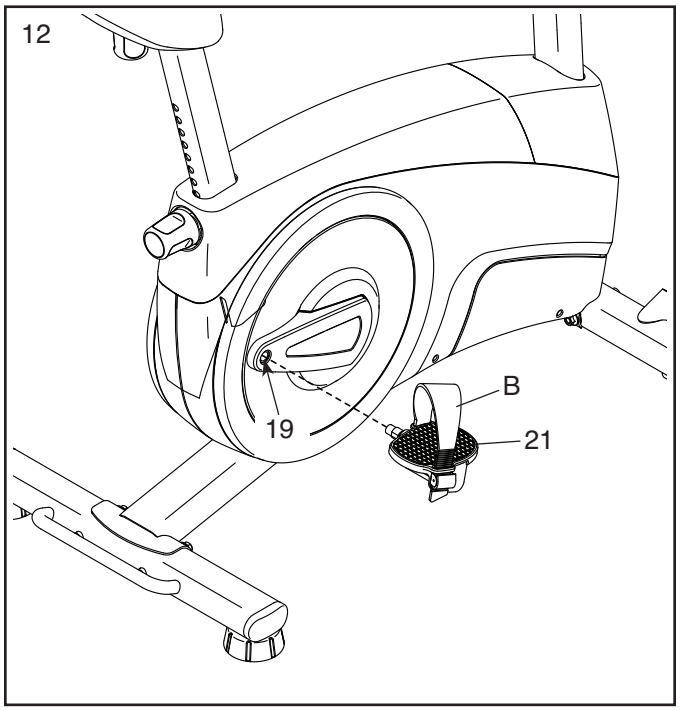

13. Attach the Tablet Holder (91) to the Console (13) with four Tablet Holder Screws (92); **start all the Tablet Holder Screws, and then tighten them.**

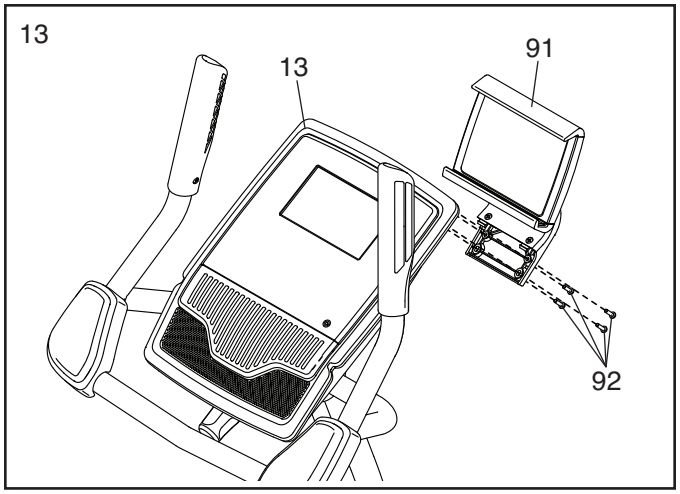

14. Plug the Power Adapter (67) into the receptacle on the front of the exercise bike.

    Note: To plug the Power Adapter (67) into an outlet, see HOW TO PLUG IN THE POWER ADAPTER on page 13.

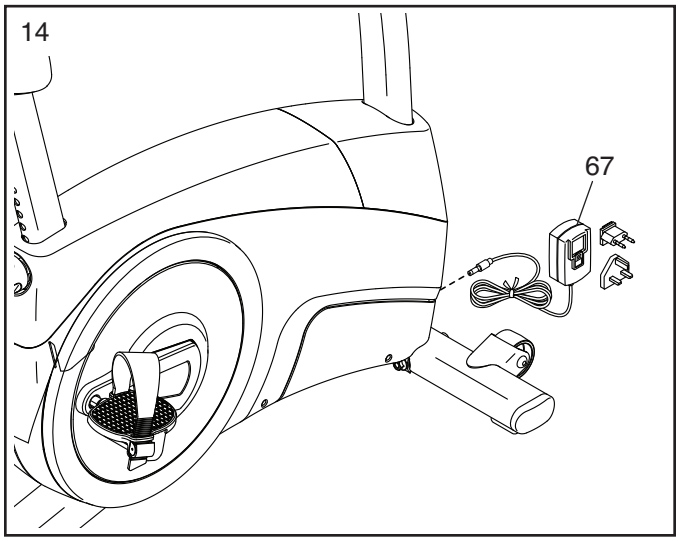

15. **After the exercise bike is assembled, inspect it to make sure that it is assembled correctly, that it functions properly, and that all parts are properly tightened.** Extra parts may be included. Place a mat under the exercise bike to protect the floor or carpet.

HOW TO USE THE EXERCISE BIKE

HOW TO PLUG IN THE POWER ADAPTER

IMPORTANT: If the exercise bike has been exposed to cold temperatures, allow it to warm to room temperature before you plug in the power adapter (A). If you do not do this, you may damage the console displays or other electronic components.

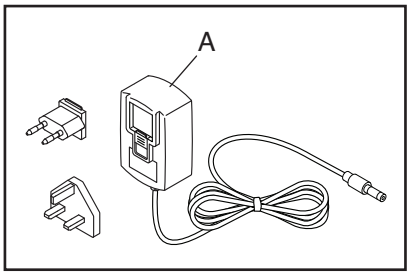

Plug the power adapter (A) into the receptacle on the front of the exercise bike. Then, plug the power adapter into an appropriate outlet that is properly installed in accordance with all local codes and ordinances.

HOW TO ADJUST THE HEIGHT OF THE SEAT

For effective exercise, the seat should be at the proper height. As you pedal, there should be a slight bend in your knees when the pedals are in the lowest position.

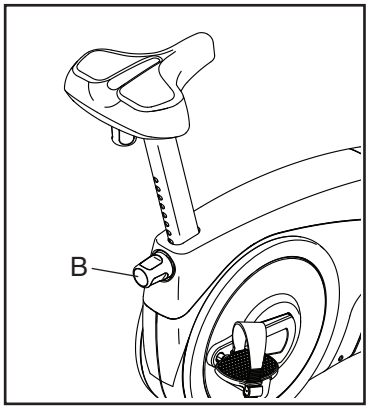

To adjust the seat, first turn the seat post knob (B) counterclockwise several turns to loosen it. Next, pull the knob, slide the seat post upward or downward to the desired position, and then release the knob. **Move the seat post up or down slightly to make sure that the knob is engaged in one of the adjustment holes in the seat post.** Then, turn the knob clockwise to tighten it.

HOW TO ADJUST THE LATERAL POSITION OF THE SEAT

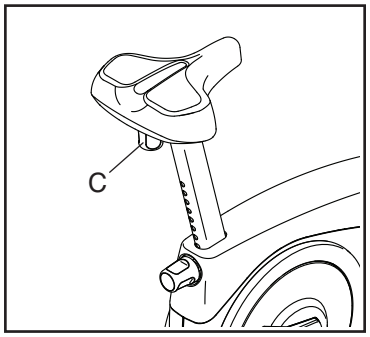

To adjust the lateral position of the seat, first loosen the seat knob (C) a few turns. Then, move the seat forward or backward to the desired position, and firmly tighten the seat knob.

HOW TO ADJUST THE PEDAL STRAPS

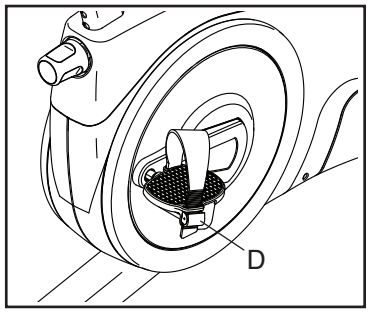

To tighten a pedal strap, pull downward on the end of the strap. To loosen a strap, press the tab (D) and pull upward on the strap.

HOW TO LEVEL THE EXERCISE BIKE

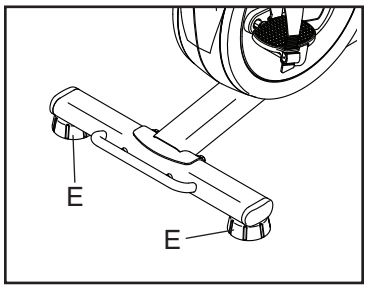

If the exercise bike rocks slightly on your floor during use, turn one or both of the leveling feet (E) beneath the rear stabilizer until the rocking motion is eliminated.

HOW TO ADJUST THE CONSOLE

The console can be adjusted to several angles. To adjust the console, turn the console knob (F) until the console is at the desired angle.

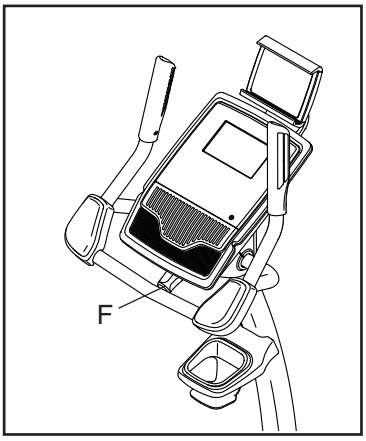

HOW TO USE THE TABLET HOLDER

IMPORTANT: The tablet holder (G) is designed for use with most full-size tablets. Do not place any other electronic device or object in the tablet holder.

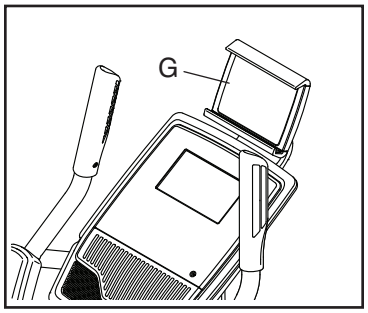

To insert a tablet into the tablet holder (G), set the bottom edge of the tablet in the tray. Then, pull the clip over the top edge of the tablet. **Make sure that the tablet is firmly secured in the tablet holder.**

If applicable to your tablet holder model, rotate and/or pivot the tablet holder to the desired position. Reverse these actions to remove the tablet from the tablet holder.

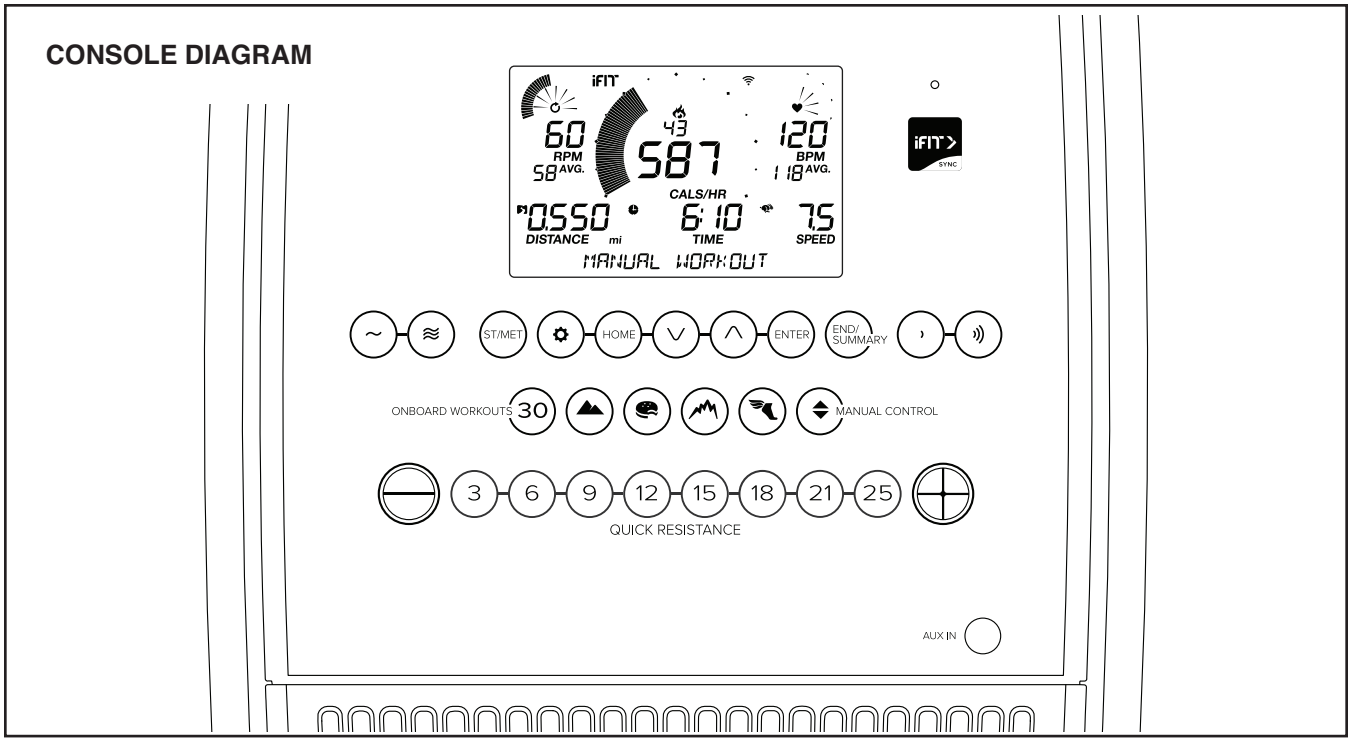

FEATURES OF THE CONSOLE

The advanced console offers an array of features designed to make your workouts more effective and enjoyable.

When you use the manual mode of the console, you can change the resistance of the pedals with the touch of a button.

While you exercise, the console will display continuous exercise feedback. You can even measure your heart rate using the handgrip heart rate monitor or a compatible heart rate monitor. **See page 20 for information about purchasing an optional chest heart rate monitor.**

You can also connect your tablet to the console and use the iFit® app to record and track your workout information.

The console also offers a selection of onboard workouts. Each workout automatically changes the resistance of the pedals as it guides you through an effective workout.

You can even connect your personal audio player to the console sound system and listen to your favorite music or audio books while you exercise.

To use the manual mode, see page 16. **To use an onboard workout,** see page 18. **To connect your tablet to the console,** see page 19. **To connect your heart rate monitor to the console,** see page 19. **To use the sound system,** see page 20. **To change console settings,** see page 20.

Note: If there is a sheet of plastic on the display, remove the plastic.

Note: The console can display speed and distance in either miles or kilometers. To change the unit of measurement, press the St/Met button repeatedly.

HOW TO USE THE MANUAL MODE

1. **Begin pedaling or press any button on the console to turn on the console.**

   When you turn on the console, the display will turn on. The console will then be ready for use.

2. **Select the manual mode.**

   Press the Manual Control button to select the manual mode.

3. **Change the resistance of the pedals as desired.**

   As you pedal, change the resistance of the pedals by pressing the Quick Resistance increase and decrease buttons or by pressing one of the numbered Quick Resistance buttons.

   Note: After you press a button, it will take a moment for the pedals to reach the selected resistance level.

4. **Follow your progress with the displays.**

   The display can show the following workout information:

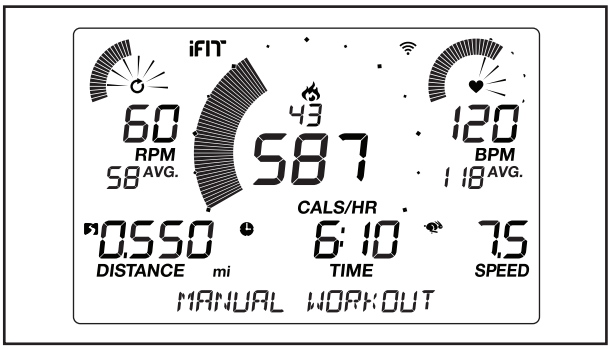

Calories (flame icon)—When the manual mode is selected, this display will show the approximate number of calories you have burned. When an onboard workout is selected, this display will show either the approximate number of calories remaining to be burned or the approximate number of calories you have burned.

Calories per Hour (Cals/Hr)—This display will show the approximate number of calories you are burning per hour.

Distance—This display will show the distance that you have pedaled in miles (mi) or kilometers (km).

Pulse (BPM)—This display will show your heart rate in beats per minute (bpm) when you use the handgrip heart rate monitor or the optional chest heart rate monitor (see step 5).

Pulse Average (BPM AVG)—This display will show your average heart rate in beats per minute (bpm) when you use the handgrip heart rate monitor or the optional chest heart rate monitor (see step 5).

Resistance—This display will show the resistance level of the pedals for a few seconds each time the resistance level changes.

RPM—This display will show your pedaling speed in revolutions per minute (rpm).

RPM Average (RPM AVG)—This display will show your average pedaling speed in revolutions per minute (rpm).

Speed—This display will show your pedaling speed in miles per hour or kilometers per hour. To change the unit of measurement, press the St/Met button repeatedly.

Time—When the manual mode is selected, this display will show the elapsed time. When an onboard workout is selected, this display will show either the time remaining in the workout or the elapsed time.

Watts—This display will show your approximate power output in watts.

Average Watts (AVG)—This display will show your approximate average power output in watts for the workout.

Scan Mode and Priority Mode—The calories and watts displays will appear in an alternating cycle (scan mode). To select either the calories display or the watts display for continuous display (priority mode), press the increase or decrease button next to the Enter button repeatedly until the desired display appears. To return to the scan mode, press the increase button repeatedly until the word SCAN appears. Press the Home button to exit the workout and return to the main menu. If necessary, press the Home button again.

Press the End/Summary button to end the workout and view a workout summary. The workout summary will appear in the displays for several seconds.

Change the volume level of the console by pressing the volume increase and decrease buttons.

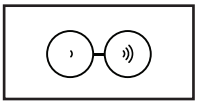

5. **Measure your heart rate if desired.**

You can measure your heart rate using either the handgrip heart rate monitor or an optional chest heart rate monitor **(see page 20 for information about the optional chest heart rate monitor).** Note: The console is compatible with Bluetooth® Smart heart rate monitors.

Note: If you use both heart rate monitors at the same time, the chest heart rate monitor will have priority.

If there are sheets of plastic on the metal contacts (A) on the handgrip heart rate monitor, remove the plastic. To measure your heart rate, hold the handgrip heart rate monitor with your palms resting against the contacts. **Avoid moving your hands or gripping the contacts tightly.**

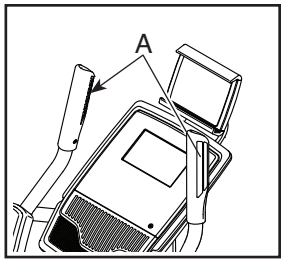

When your pulse is detected, your heart rate will appear in the display. **For the most accurate heart rate reading, hold the contacts for at least 15 seconds.**

6. **Turn on the fan if desired.**

The fan has several speed settings, including an auto mode. While the auto mode is selected, the speed of the fan will automatically increase or decrease as your exercise intensity increases or decreases. Press the fan increase and decrease buttons repeatedly to select a fan speed or to turn off the fan.

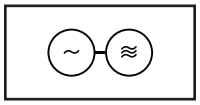

Note: If the pedals do not move for about 30 seconds, the fan will turn off automatically.

7. **When you are finished exercising, the console will turn off automatically.**

If the pedals do not move for several seconds, the console will pause and the time will flash in the display. To resume your workout, simply resume pedaling.

If the pedals do not move for several minutes and the buttons are not pressed, the console will turn off and the display will be reset.

HOW TO USE AN ONBOARD WORKOUT

1. **Begin pedaling or press any button on the console to turn on the console.**

   When you turn on the console, the display will turn on. The console will then be ready for use.

2. **Select an onboard workout.**

   To select an onboard workout, press the desired Onboard Workouts button repeatedly until the desired workout appears in the display.

   When you select an onboard workout, the display will show the name of the workout and the duration of the workout or the number of calories to be burned.

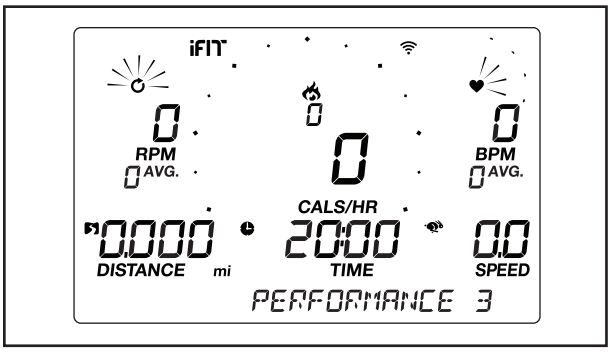

   The maximum speed and the maximum resistance level for the workout will also appear in the display.

3. **Begin pedaling to start the workout.**

   Each workout is divided into one-minute segments. One resistance level and one target RPM is programmed for each segment. Note: The same resistance level and/or target RPM may be programmed for consecutive segments.

   If a different resistance level and/or target RPM is programmed for the next segment of the workout, the resistance level and/or target RPM will appear in the display for a few seconds to alert you. The resistance of the pedals will then change.

   As you exercise, keep your pedaling speed near the target RPM for the current segment.

   IMPORTANT: The target RPM is intended only to provide motivation. Your actual pedaling speed may be slower than the target RPM. Make sure to pedal at a speed that is comfortable for you.

   If the resistance level for the current segment is too high or too low, you can manually override the setting by pressing the Quick Resistance buttons. **IMPORTANT: When the current segment of the workout ends, the pedals will automatically adjust to the resistance level programmed for the next segment.**

   The workout will continue in this way until the last segment ends. To pause the workout at any time, stop pedaling. The time will flash in the display. To resume the workout, simply resume pedaling.

   To end the workout, press the End/Summary button. A summary of the workout will appear in the displays for several seconds.

4. **Follow your progress with the displays.**

   See step 4 on page 16.

5. **Measure your heart rate if desired.**

   See step 5 on page 17.

6. **Turn on the fan if desired.**

   See step 6 on page 17.

7. **When you are finished exercising, the console will turn off automatically.**

   See step 7 on page 17.

HOW TO CONNECT YOUR TABLET TO THE CONSOLE

The console supports Bluetooth connections to tablets via the iFit app and to compatible heart rate monitors. Note: Other Bluetooth connections are not supported.

1. **Download and install the iFit app on your tablet.**

   On your iOS® or Android™ tablet, open the App Store℠ or the Google Play™ store, search for the free iFit app, and then install the app on your tablet. **Make sure that the Bluetooth option is enabled on your tablet.**

   Then, open the iFit app and follow the instructions to set up an iFit account and customize settings.

2. **Connect your heart rate monitor to the console if desired.**

   If you are connecting both your heart rate monitor and your tablet to the console, **you must connect your heart rate monitor before you connect your tablet.** See HOW TO CONNECT YOUR HEART RATE MONITOR TO THE CONSOLE at the right.

3. **Connect your tablet to the console.**

   Press the iFit Sync button on the console; the console pairing number will appear in the display. Then, follow the instructions in the iFit app to connect your tablet to the console.

   When a connection is established, the LED on the console will turn solid blue.

4. **Record and track your workout information.**

   Follow the instructions in the iFit app to record and track your workout information.

5. **Disconnect your tablet from the console if desired.**

   To disconnect your tablet from the console, first select the disconnect option in the iFit app. Then, press and hold the iFit Sync button on the console until the LED on the console turns solid green.

   Note: All Bluetooth connections between the console and other devices (including any tablets, heart rate monitors, and so forth) will be disconnected.

HOW TO CONNECT YOUR HEART RATE MONITOR TO THE CONSOLE

The console is compatible with all Bluetooth Smart heart rate monitors.

To connect your Bluetooth Smart heart rate monitor to the console, press the iFit Sync button on the console; the console pairing number will appear in the display. When a connection is established, the LED on the console will flash red twice.

Note: If there is more than one compatible heart rate monitor near the console, the console will connect to the heart rate monitor with the strongest signal.

To disconnect your heart rate monitor from the console, press and hold the iFit Sync button on the console until the LED on the console turns solid green.

Note: All Bluetooth connections between the console and other devices (including any tablets, heart rate monitors, and so forth) will be disconnected.

HOW TO USE THE SOUND SYSTEM

To play music or audio books through the console sound system while you exercise, plug a 3.5 mm male to 3.5 mm male audio cable (not included) into the jack on the console and into a jack on your personal audio player; **make sure that the audio cable is fully plugged in. Note: To purchase an audio cable, see your local electronics store.**

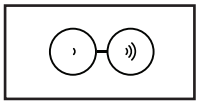

Next, press the play button on your personal audio player. Adjust the volume level using the volume increase and decrease buttons on the console or the volume control on your personal audio player.

THE OPTIONAL CHEST HEART RATE MONITOR

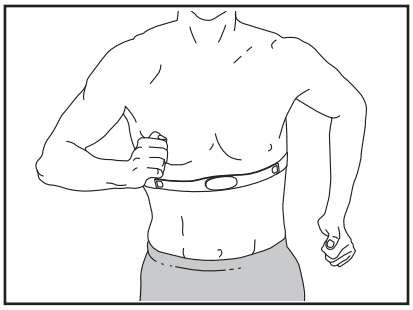

Whether your goal is to burn fat or to strengthen your cardiovascular system, the key to achieving the best results is to maintain the proper heart rate during your workouts. The optional chest heart rate monitor will enable you to continuously monitor your heart rate while you exercise, helping you to reach your personal fitness goals. **To purchase a chest heart rate monitor, please see the front cover of this manual.**

Note: The console is compatible with all Bluetooth Smart heart rate monitors.

HOW TO CHANGE CONSOLE SETTINGS

1. **Select the settings mode.**

   To select the settings mode, press the gear button. The settings information will appear in the display.

2. **Navigate the settings mode.**

   While the settings mode is selected, the display will show several optional screens. Press the increase and decrease buttons near the Enter button repeatedly to select the desired optional screen.

   The lower section of the display will show instructions for the selected screen. **Make sure to follow the instructions shown in the lower part of the display.**

3. **Change settings as desired.**

   Units—The currently selected unit of measurement will appear in the display. To change the unit of measurement, press the Enter button repeatedly. To view distance in miles, select ENGLISH. To view distance in kilometers, select METRIC.

   Contrast Level—The currently selected contrast level will appear in the display. Press the Quick Resistance increase and decrease buttons to adjust the contrast level.

   Usage Information—The display will show the total number of hours that the exercise bike has been used and the total distance (in miles or kilometers) that has been pedaled on the exercise bike.

4. **Exit the settings mode.**

   Press the gear button to exit the settings mode.

MAINTENANCE AND TROUBLESHOOTING

MAINTENANCE

Regular maintenance is important for optimal performance and to reduce wear. Inspect and properly tighten all parts each time the exercise bike is used. Replace any worn parts immediately. Use only manufacturer-supplied parts.

To clean the exercise bike, use a damp cloth and a small amount of mild soap. **IMPORTANT: To avoid damage to the console, keep liquids away from the console and keep the console out of direct sunlight.**

CONSOLE TROUBLESHOOTING

If the console does not turn on, make sure that the power adapter is fully plugged in.

If lines appear in the console display, see HOW TO CHANGE CONSOLE SETTINGS on page 20 and adjust the contrast level of the display.

If the console does not display your heart rate when you use the handgrip heart rate monitor, see step 5 on page 17.

If a replacement power adapter is needed, call the telephone number on the cover of this manual. IMPORTANT: To avoid damaging the console, use only a manufacturer-supplied regulated power adapter.

TABLET HOLDER TROUBLESHOOTING

If the tablet holder does not stay in place, rotate the tablet holder backward and tighten the screw (A) until the tablet holder stays in place when it is rotated to the desired position.

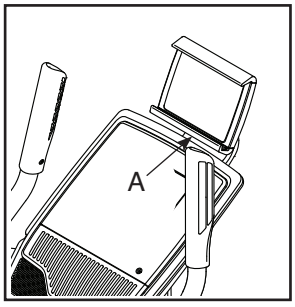

HOW TO ADJUST THE DRIVE BELT

If the pedals slip while you are pedaling, even while the resistance is adjusted to the highest setting, the drive belt may need to be adjusted. **Before you adjust the drive belt, unplug the power adapter.**

Next, remove the M4 x 16mm Flat Head Screw (95) from the Front Shield Cover (9). Then, using a standard screwdriver, release the Front Shield Cover and slide it out of the way.

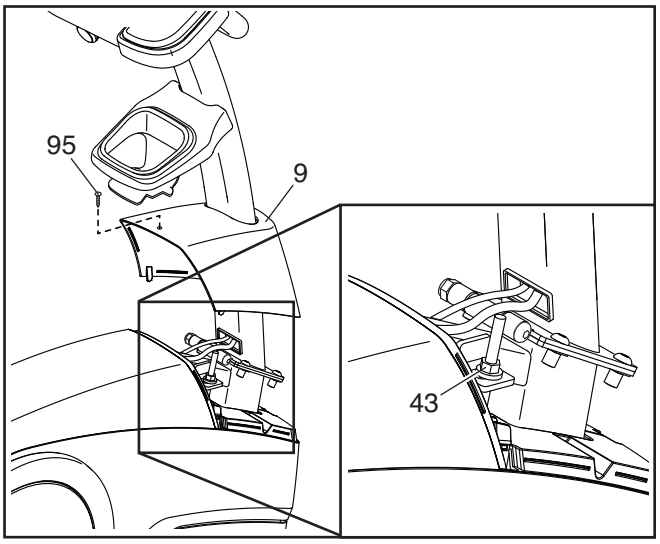

Next, tighten the indicated M8 Locknut (43) slightly to tighten the Drive Belt (not shown). Then, reattach the Front Shield Cover (9) and plug in the power adapter.

Repeat this process, if necessary, until the pedals no longer slip.

HOW TO ADJUST THE REED SWITCH

If the console does not display correct feedback, the reed switch should be adjusted. **Before you adjust the reed switch, unplug the power adapter.**

Using a small standard screwdriver, carefully pry the left Cover Insert (35) off the left Crank Arm Cover (33). Next, remove the M5 x 12mm Screw (85) and the M5 x 21mm Screw (86). Then, rotate the left Crank Arm Cover out of the way.

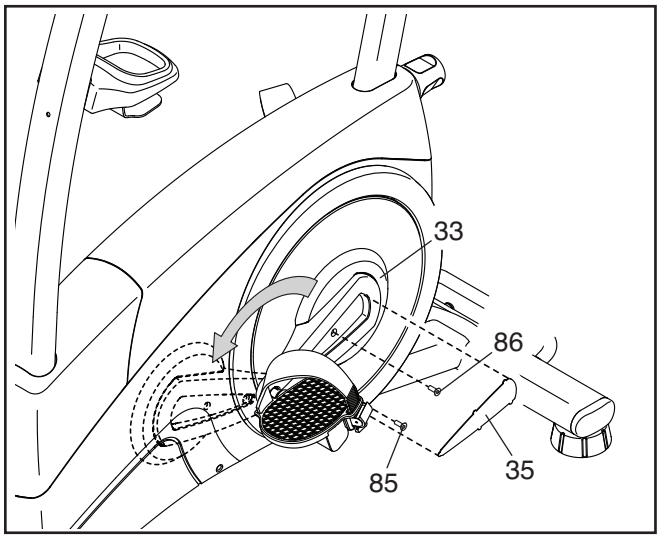

Next, locate the Reed Switch (57). Rotate the Left Crank Arm (20) until a Magnet (55) is aligned with the Reed Switch. Then, loosen the M5 x 16mm Flat Head Screw (60), slide the Reed Switch slightly toward or away from the Magnet, and then retighten the Flat Head Screw.

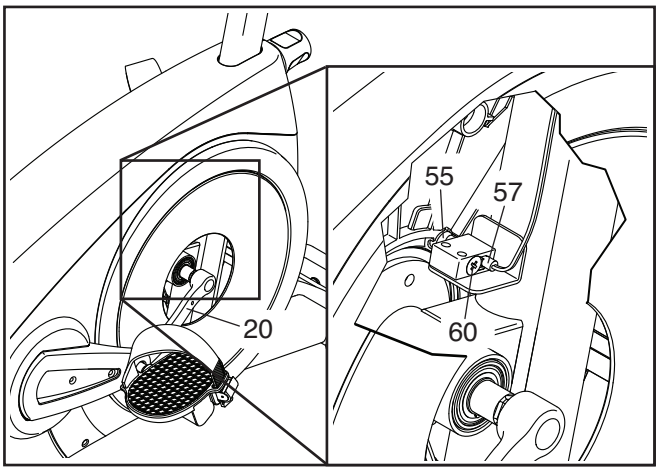

Plug in the power adapter and rotate the Left Crank Arm (20) for a moment. Repeat these actions until the console displays correct feedback.

When the reed switch is correctly adjusted, reattach the parts that you removed.

EXERCISE GUIDELINES

⚠ WARNING: Before beginning this or any exercise program, consult your physician. This is especially important for persons over age 35 or persons with pre-existing health problems.

The heart rate monitor is not a medical device. Various factors may affect the accuracy of heart rate readings. The heart rate monitor is intended only as an exercise aid in determining heart rate trends in general.

These guidelines will help you to plan your exercise program. For detailed exercise information, obtain a reputable book or consult your physician. Remember, proper nutrition and adequate rest are essential for successful results.

EXERCISE INTENSITY

Whether your goal is to burn fat or to strengthen your cardiovascular system, exercising at the proper intensity is the key to achieving results. You can use your heart rate as a guide to find the proper intensity level. The chart below shows recommended heart rates for fat burning and aerobic exercise.

165	*155*	*145*	*140*	*130*	*125*	*115*	♥
145	*138*	*130*	*125*	*118*	*110*	*103*	♥
125	*120*	*115*	*110*	*105*	*95*	*90*	♥
20	*30*	*40*	*50*	*60*	*70*	*80*	

To find the proper intensity level, find your age at the bottom of the chart (ages are rounded off to the nearest ten years). The three numbers listed above your age define your "training zone." The lowest number is the heart rate for fat burning, the middle number is the heart rate for maximum fat burning, and the highest number is the heart rate for aerobic exercise.

Burning Fat—To burn fat effectively, you must exercise at a low intensity level for a sustained period of time. During the first few minutes of exercise, your body uses carbohydrate calories for energy. Only after the first few minutes of exercise does your body begin to use stored fat calories for energy. If your goal is to burn fat, adjust the intensity of your exercise until your heart rate is near the lowest number in your training zone. For maximum fat burning, exercise with your heart rate near the middle number in your training zone.

Aerobic Exercise—If your goal is to strengthen your cardiovascular system, you must perform aerobic exercise, which is activity that requires large amounts of oxygen for prolonged periods of time. For aerobic exercise, adjust the intensity of your exercise until your heart rate is near the highest number in your training zone.

WORKOUT GUIDELINES

Warming Up—Start with 5 to 10 minutes of stretching and light exercise. A warm-up increases your body temperature, heart rate, and circulation in preparation for exercise.

Training Zone Exercise—Exercise for 20 to 30 minutes with your heart rate in your training zone. (During the first few weeks of your exercise program, do not keep your heart rate in your training zone for longer than 20 minutes.) Breathe regularly and deeply as you exercise; never hold your breath.

Cooling Down—Finish with 5 to 10 minutes of stretching. Stretching increases the flexibility of your muscles and helps to prevent post-exercise problems.

EXERCISE FREQUENCY

To maintain or improve your condition, complete three workouts each week, with at least one day of rest between workouts. After a few months of regular exercise, you may complete up to five workouts each week, if desired. Remember, the key to success is to make exercise a regular and enjoyable part of your everyday life.

PART LIST

Model No. PFEX14817-INT.0 R0321A

Key No.	Qty.	Description
1	1	Frame
2	1	Front Stabilizer
3	1	Rear Stabilizer
4	1	Upright
5	1	Handlebar
6	1	Seat Post
7	1	Rear Shield Cover
8	1	Accessory Tray
9	1	Front Shield Cover
10	1	Right Shield
11	1	Left Shield
12	1	Front Pivot Cover
13	1	Console
14	2	Shield Ring
15	1	Rear Pivot Cover
16	1	Right Armrest
17	2	Wheel
18	2	M10 x 62mm Bolt
19	1	Right Crank Arm
20	1	Left Crank Arm
21	1	Right Pedal/Strap
22	1	Left Pedal/Strap
23	1	Seat
24	1	Seat Carriage
25	1	Small Snap Ring
26	1	Seat Knob
27	1	Seat Post Knob
28	1	Seat Post Sleeve
29	1	Power Receptacle/Wire
30	1	Seat Bracket
31	1	Left Armrest
32	4	Stabilizer Cap
33	2	Crank Arm Cover
34	16	#8 x 16mm Screw
35	2	Cover Insert
36	2	Leveling Foot
37	1	Right Pulse Grip
38	1	Pulley
39	1	Crank
40	2	Crank Bearing
41	2	Large Snap Ring
42	1	Eddy Mechanism
43	6	M8 Locknut
44	10	M8 x 12mm Screw
45	1	Idler
46	4	M8 Black Split Washer
47	1	Resistance Motor
48	1	M8 x 18mm Screw
49	5	Knob Nut
50	1	M8 x 76mm Bolt
51	1	J-bolt
52	4	#10 x 12mm Screw
53	4	M10 x 98mm Screw
54	1	Drive Belt
55	2	Magnet
56	1	Clamp
57	1	Reed Switch/Wire
58	1	Lower Wire
59	2	Stabilizer Foot
60	1	M5 x 16mm Flat Head Screw
61	1	Pulse Wire
62	2	M8 Flange Screw
63	6	M8 x 16mm Screw
64	2	M8 Washer
65	4	M8 x 20mm Screw
66	2	M10 Jam Nut
67	1	Power Adapter
68	2	M4 x 19mm Screw
69	2	Clip Nut
70	2	M8 x 50mm Bolt
71	1	Pivot Bracket
72	7	M4 x 16mm Screw
73	1	Left Pulse Grip
74	1	Pivot Axle
75	1	Small Block
76	1	Large Block
77	1	Console Knob
78	1	Pivot Post
79	2	Large Bushing
80	2	Small Bushing
81	4	M8 x 15mm Shoulder Screw
82	1	J-bolt Washer
83	4	M4 x 32mm Screw
84	9	M4 x 22mm Screw
85	2	M5 x 12mm Screw
86	2	M5 x 21mm Screw
87	1	Upper Wire
88	1	Grommet
89	1	M6 x 50mm Screw
90	2	M5 x 16mm Screw

Key No.	Qty.	Description	Key No.	Qty.	Description
91	1	Tablet Holder	95	1	M4 x 16mm Flat Head Screw
92	4	Tablet Holder Screw	96	1	Tray Bracket
93	1	M8 x 12mm x 1.5mm Washer	*	–	User's Manual
94	1	M8 x 12mm x 4.5mm Washer	*	–	Assembly Tool

Note: Specifications are subject to change without notice. See the back cover of this manual for information about ordering replacement parts. *These parts are not illustrated.

EXPLODED DRAWING A

Model No. PFEX14817-INT.0 R0321A

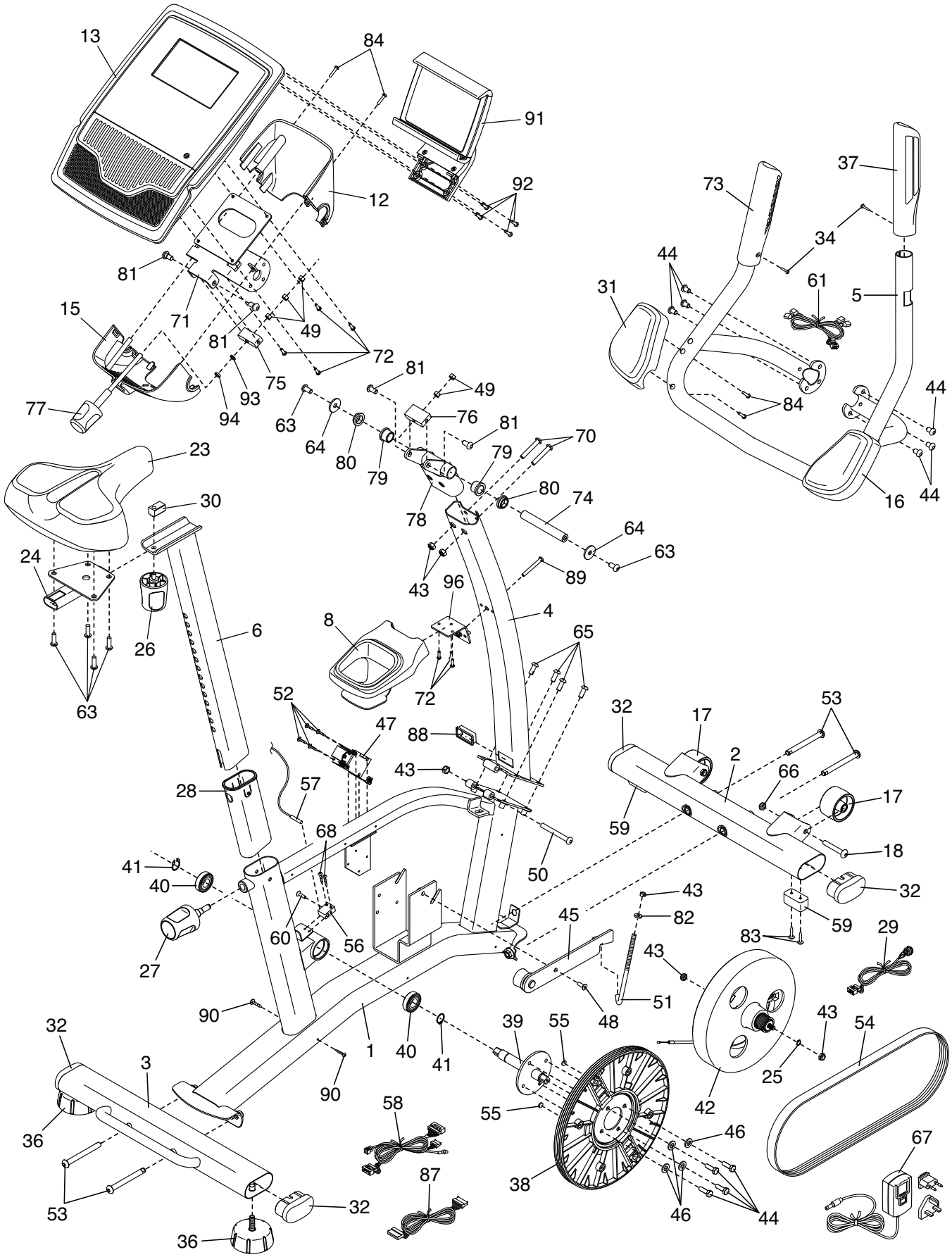

EXPLODED DRAWING B

Model No. PFEX14817-INT.0 R0321A

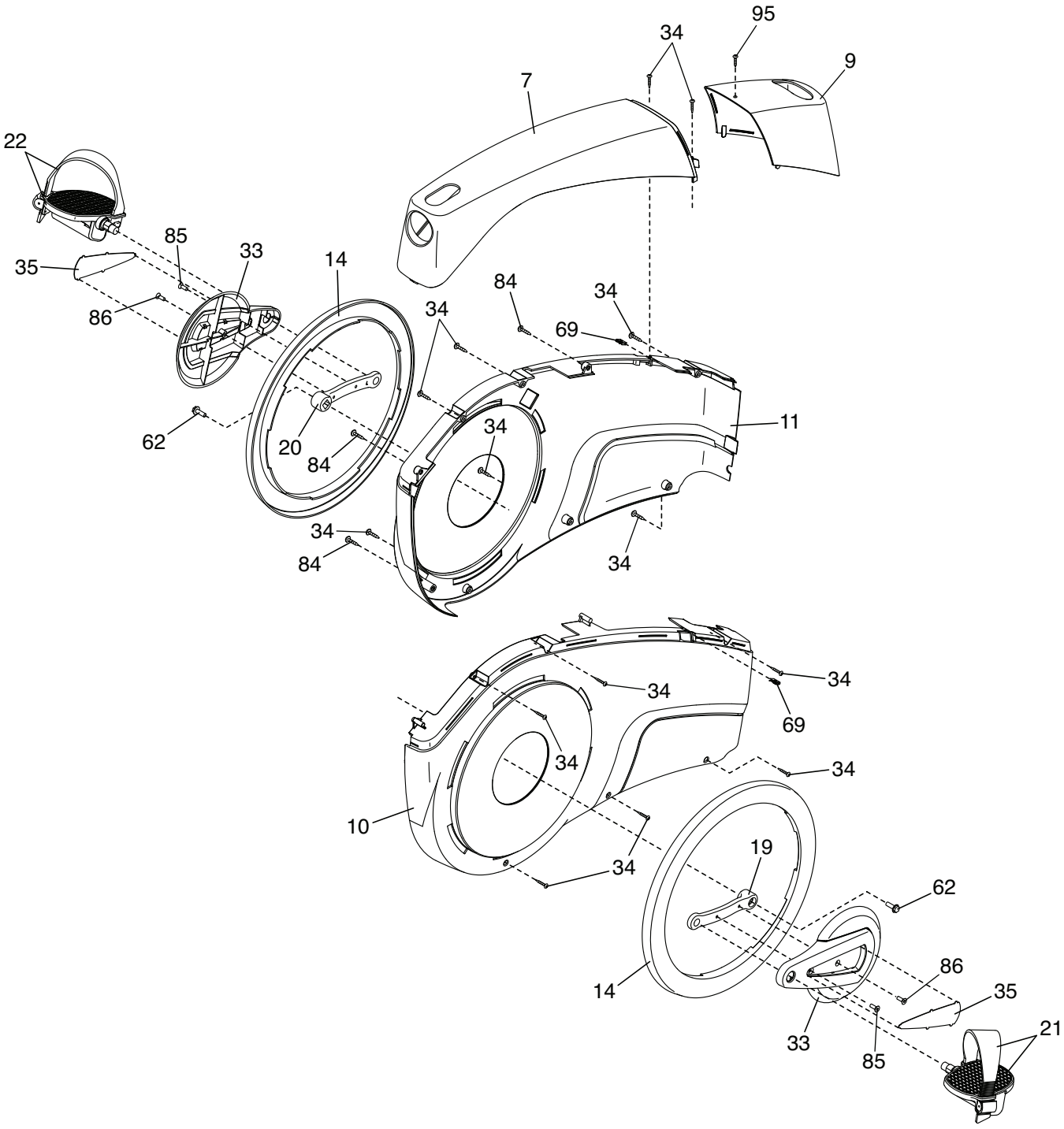

ORDERING REPLACEMENT PARTS

To order replacement parts, please see the front cover of this manual. To help us assist you, be prepared to provide the following information when contacting us:

- the model number and serial number of the product (see the front cover of this manual)
- the name of the product (see the front cover of this manual)
- the key number and description of the replacement part(s) (see the PART LIST and the EXPLODED DRAWING near the end of this manual)

RECYCLING INFORMATION

This electronic product must not be disposed of in municipal waste. To preserve the environment, this product must be recycled after its useful life as required by law.

Please use recycling facilities that are authorized to collect this type of waste in your area. In doing so, you will help to conserve natural resources and improve European standards of environmental protection. If you require more information about safe and correct disposal methods, please contact your local city office or the establishment where you purchased this product.

Part No. 430158 R0321A

Printed in China © 2021 ICON Health & Fitness, Inc.